PRO-FIT® WHIRLPOOL & BATHTUB
4260 60” x 42" x 20 ¼”
Model number: 6024/6524

MANSFIELD™

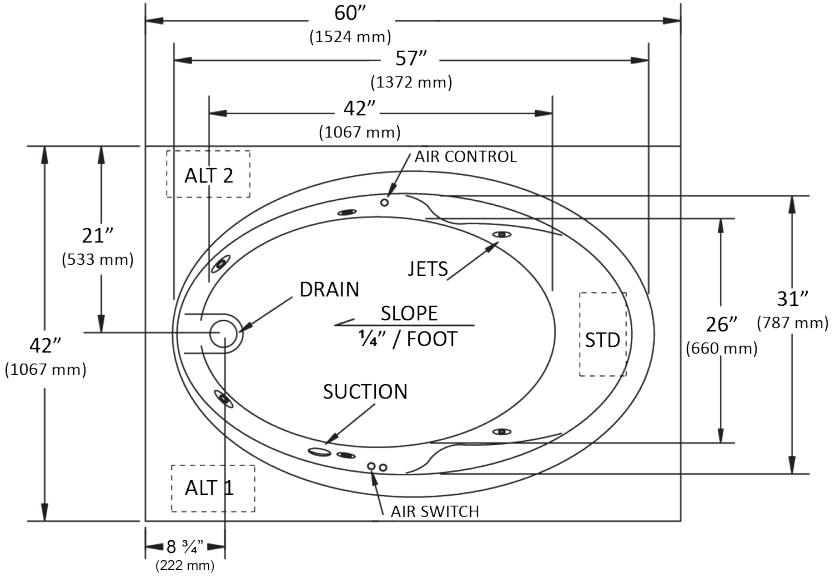

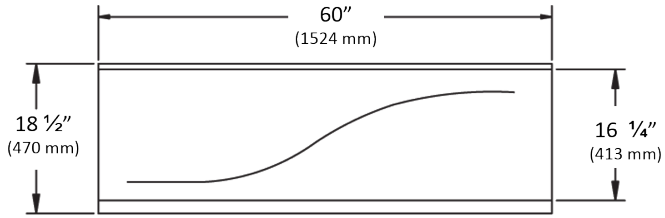

OPTIONAL REMOVABLE APRON

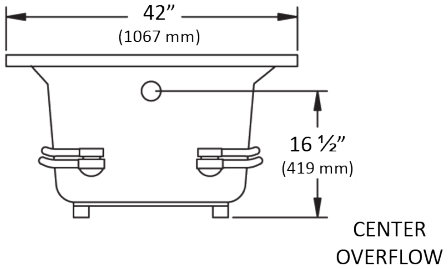

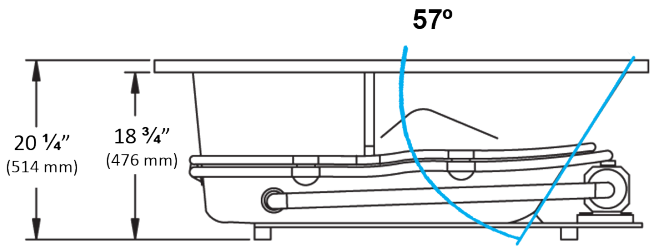

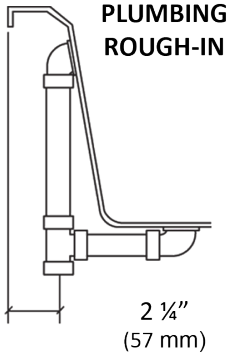

NOTES:
1. Pump locations shown for clarity. Specify when ordering STD - Standard or ALT1 - Alternate 1 or ALT2 - Alternate 2.
2. Required pump motor access is 20” W x 15” H.
3. Measurements may vary 1/4” (+/-)
4. If a factory installed nailing flange is added to a unit, add 1/8” to each side flanged.
5. Optional Removable Apron is available for this unit.
6. These dimensions are nominal and subject to change without notice.

SPECIFICATIONS:

Dimensions:	60" x 42" x 20 ¼"	**Number of jets:**	6
Material:	Acrylic, fiberglass reinforced	**Weight:**	120 lbs.
Pump Motor:	120 V, 60 HZ, 6.0 Amp, Single Speed, Premounted	**Water Capacity:**	55 gals max., 42 gals min.
Electrical Requirements:	120 V, 15 Amp, GFCI Protected	**Floor Loading:**	47 lbs./sq.ft. (229 kg/m^2)
On/Off Control:	Air Switch	**Shipping Weight:**	148 lbs. / 128 lbs.